Note: 1/ Material of output shaft is stainless steel;
Material of shaft housing is brass (nickel plated);
2/ Motor painted white;
3/ Without W.E logo.

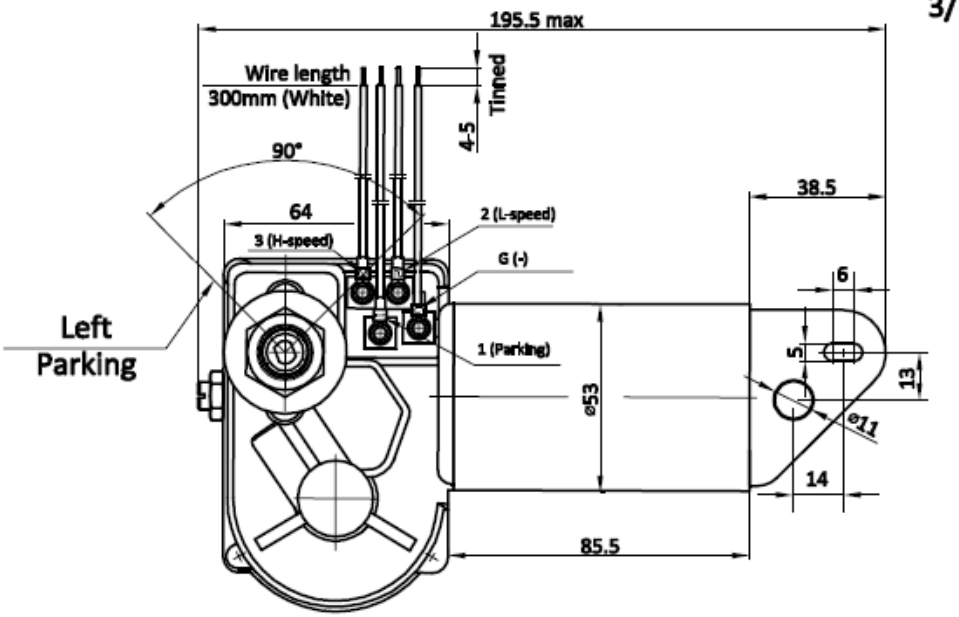


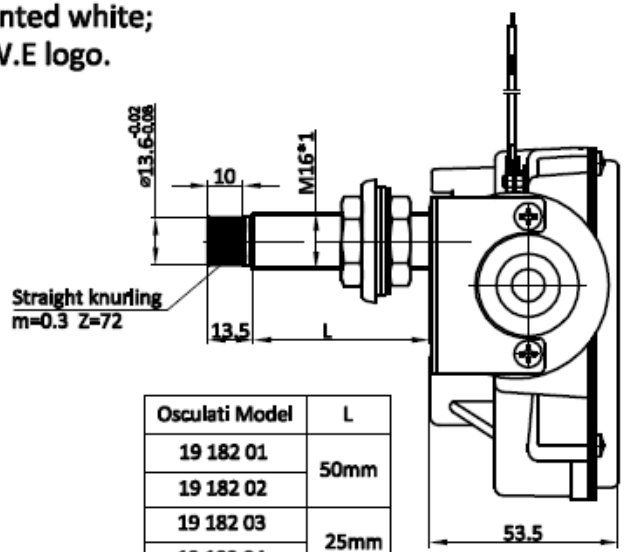


| Osculati Model | L |
|---|---|
| 19 182 01 | 50mm |
| 19 182 02 | |
| 19 182 03 | 25mm |
| 19 182 04 | |

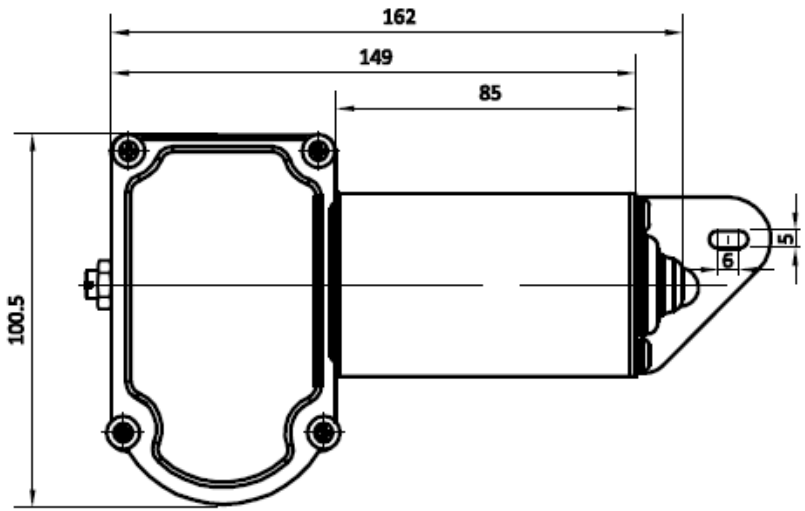


| Item | Data | | | |
|---|---|---|---|---|
| Rated voltage | 12V | | 24V | |
| Test voltage | 13.5V | | 27V | |
| Wiping speed | 30±5~45±5rpm | | | |
| No-load current | H-speed | L-speed | H-speed | L-speed |
| | ≤20 | ≤15 | ≤15 | ≤1 |
| Rated torque | 3.43Nm (L-speed) | | | |
| Brake torque | ≥12N.m (L-speed) | | | |
| Noise | ≤55dB(A) | | | |

## Circuit diagram

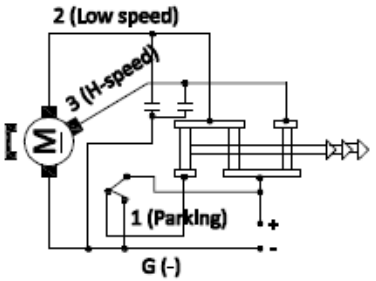


Note: 1 - Parking;
2 - Low speed;
3 - High speed

| | | | |
|---|---|---|---|
| Signature | Date | | |
| Issued by | Zhang Ming | 2013.6.20 | |

| | | | |
|---|---|---|---|
| Wiper motor | | Zhejiang White Elephant Automobile Accessory Co., Ltd | |
| | | Customer | Osculati S.P.A |
| | | Model / Part no. | 19 182 01<br>19 182 02<br>19 182 03<br>19 182 04 |
| View | | Drawing # | |
| Ratio | 1:1 | Version | A |

| | |
|---|---|
| Signature | |
| Zhang Ming | |
| Date | |
| 2013.6.20 | |